KF T120

Kitchen fans

Caisson de ventilation

Küchenabluftboxen

Extractor de cocina

Kitchen exhaust units are used for installation where the air is slightly greasy or the air temperature is up to 120°C. Unit has a swing-out door for easy inspection and service. The direction of the door opening is from left to right. The fan is isolated from the casing via connectors and anti-vibration mounts.

Impellers: forward-curved blades made of galvanized sheet steel.

Motor: Maintenance free, speed controllable, motors safety class IP55, On/Off safety switch.

Housing: The casing is manufactured from double-skinned galvanized steel and is insulated with 50 mm mineral wool.

Küchenabluftboxen sind zur Förderung von fetthaltiger oder heißer (bis 120°C) Luft geeignet. Die Türen sind ausschwenkbar für leichte Service und Inspektion. Die Türen öffnen sich von links nach rechts.

Inklusive Montagerahmen mit Schwingungsdämpfer.

Laufrad aus verzinktem Blech, rückwärts gekrümmt

Motor: wartungsfrei, Motorschutz IP55, eingebaute Reparaturschalter

Gehäuse doppelwandig, aus verzinktem Blech, Schall- und Wärmedämmung 50mm.

Caisson de ventilation adapté pour l'extraction de l'air légèrement grasse des cuisines dont la température maximum est de 120°C. Il dispose d'une porte swing-out pour faciliter le contrôle et l'entretien. La direction de l'ouverture de la porte est de gauche à droite. Le ventilateur est isolé du boîtier via des connecteurs et des supports anti-vibration. Turbine à aubes en tôle d'acier galvanisé inclinées en avant. Moteur ne nécessite pas d'entretien, vitesse réglable, protection IP55, interrupteur de proximité.

Double paroi en acier galvanisé avec isolation en laine minérale de 50 mm.

Caja de ventilación para la extracción de aire ligeramente graso cuya temperatura máxima es 120°C. Tiene una puerta basculante para facilitar la inspección y mantenimiento. La dirección de la apertura de la puerta es de izquierda a derecha. El ventilador está aislado de la carcasa a través de conectores y soportes anti-vibración.

Los álabes de la turbina son en chapa de acero galvanizado y curvados hacia delante.

El motor no requiere de mantenimiento, velocidad ajustable, protección IP55, interruptor de proximidad.

Aislamiento con doble pared de acero galvanizado y lana mineral de 50 mm en su interior.

Accessories

Single phase speed controller

TGRV p. 102

Three phase speed controller

TGRT p. 103

Frequency inverter

FI p. 107

The company reserves the right to make changes of technical data without prior notice

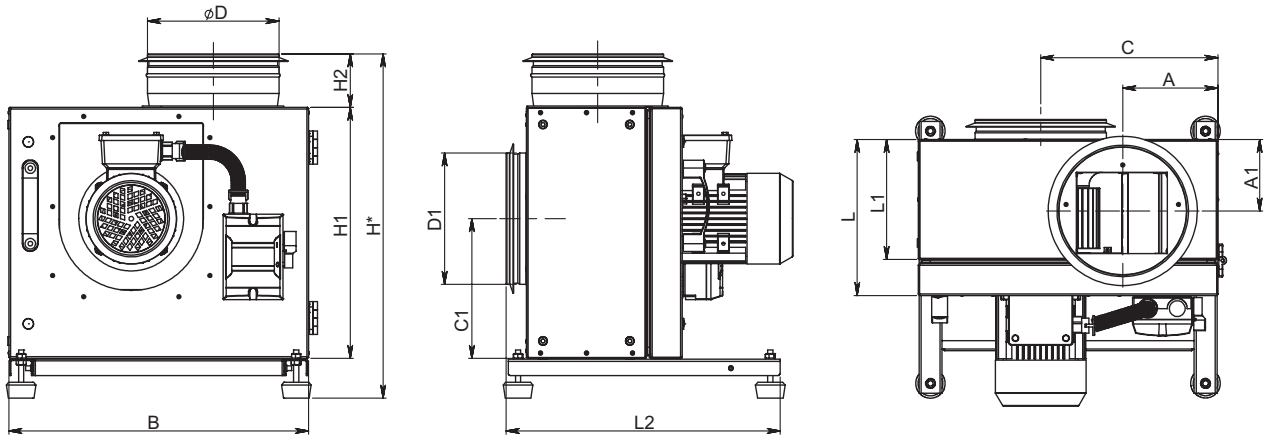

Type	Dimensions [mm]												
	øD	øD1	L	L1	L2	H*	H1	H2	B	A	A1	C	C1
KF T120 160	200	200	228	173	414	496	355	80	413	123	109	237	195
KF T120 180	200	200	237	182	417	524	382	80	456	145	109	270	213
KF T120 200	200	200	250	196	500	548	407	80	484	145	117	287	228
KF T120 225	250	250	277	222	500	597	456	80	537	161	131	305	253
KF T120 250	315	315	290	136	620	651	500	90	577	170	146	342	278
KF T120 280	315	315	308	253	620	688	537	90	626	180	153	367	304
KF T120 315	315	315	298	242	620	752	600	90	695	195	142	410	339
KF T120 355	400	400	340	285	620	905	655	190	770	211	170	455	370
KF T120 400	400	400	358	298	620	890	640	190	750	202	170	450	355

Type	Accessories				
	TGRV	TGRT	Mains		
			1X230 V	3X230 V	3X400 V
KF T120 160-4L1	2	-	ODE-2-12037-1KB12-01	ODE-2-12037-1KB12-01	-
KF T120 160-4L3	-	1	ODE-2-12037-1KB12	ODE-2-12037-3K012	ODE-2-14075-3KA12
KF T120 180-4L1	4	-	ODE-2-12075-1KB12-01	ODE-2-12075-1KB12-01	-
KF T120 180-4L3	-	2	ODE-2-12037-1KB12	ODE-2-12075-3K012	ODE-2-14075-3KA12
KF T120 200-4L1	5	-	ODE-2-12075-1KB12-01	ODE-2-12075-1KB12-01	-
KF T120 200-4L3	-	3	ODE-2-12075-1KB12	ODE-2-12075-3K012	ODE-2-14075-3KA12
KF T120 225-4L1	11	-	ODE-2-22110-1KB42-01	ODE-2-22110-1KB42-01	-
KF T120 225-4L3*	-	-	ODE-2-12150-1KB12	ODE-2-12150-3K012	ODE-2-14150-3KA12
KF T120 250-4L1	14	-	-	-	-
KF T120 250-4L3*	-	-	ODE-2-22220-1KB42	ODE-2-22220-3KB42	ODE-2-24220-3KA42
KF T120 280-4L3	-	-	ODE-2-32040-1KB42	ODE-2-32040-3KB42	ODE-2-24400-3KA42
KF T120 315-4L1	3	-	ODE-2-12075-1KB12-01	ODE-2-12037-1KB12-01	-
KF T120 315-4L3	-	1	ODE-2-12037-1KB12	ODE-2-12037-3K012	ODE-2-14075-3KA12
KF T120 355-4L1	4	-	ODE-2-12075-1KB12-01	ODE-2-12075-1KB12-01	-
KF T120 355-4L3	-	2	ODE-2-12037-1KB12	ODE-2-12037-3K012	ODE-2-14075-3KA12
KF T120 400-4L1	5	-	ODE-2-12075-1KB12-01	ODE-2-12075-1KB12-01	-
KF T120 400-4L3	-	3	ODE-2-12075-1KB12	ODE-2-12075-3K012	ODE-2-14075-3KA12

* performance operating area is limited. Do not exceed the normal current, additional overload protection is required.

The company reserves the right to make changes of technical data without prior notice

KF T120

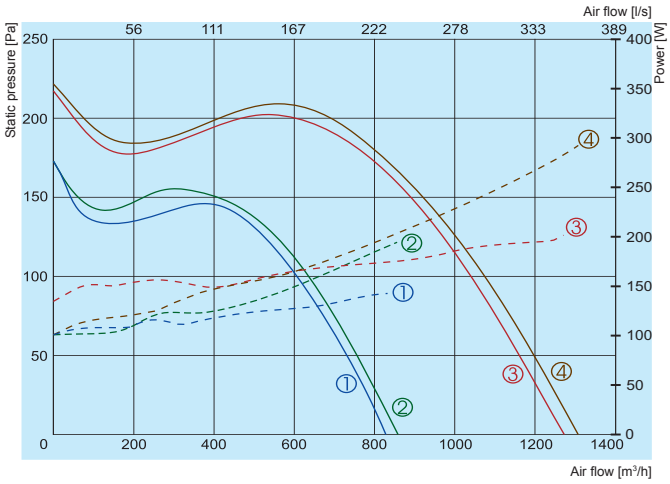

① KF T120 160-4L1
② KF T120 160-4L3
③ KF T120 180-4L1
④ KF T120 180-4L3

——— Performance
------- Power consumption

		160-4L1	160-4L3	180-4L1	180-4L3
Voltage/Frequency	[V/Hz]	~1,230/50	~3,400/50	~1,230/50	~3,400/50
Power consumption	[kW]	0,22	0,18	0,4	0,29
Current	[A]	1,19	0,57	2,57	1,0
Speed	[min⁻¹]	1360	1310	1320	1340
Max. airflow	[m³/h]	829	849	1272	1303
Min/Max ambient air temperature	[°C]	-40/+40	-40/+40	-40/+40	-40/+40
Weight	[kg]	22	22	25	25
Wiring diagram		No.1	No.3	No.1	No.3
Protection class:	motor	IP-55	IP-55	IP-55	IP-55
Comply with ERP 2013		+	+	+	+

160-4L1	LWA total, dB(A)	Lwa, dB(A)						
		125 Hz	250 Hz	500 Hz	1 kHz	2 kHz	4 kHz	8 kHz
Inlet	72	65	64	69	60	55	54	48
Outlet	74	66	69	70	59	60	56	50
Surrounding	56	48	51	53	44	40	38	33

Measured at 601 m³/h, 100 Pa

160-4L3	LWA total, dB(A)	Lwa, dB(A)						
		125 Hz	250 Hz	500 Hz	1 kHz	2 kHz	4 kHz	8 kHz
Inlet	73	62	64	72	60	55	54	48
Outlet	75	63	69	73	59	60	56	50
Surrounding	56	47	52	53	43	40	38	33

Measured at 621 m³/h, 103 Pa

180-4L1	LWA total, dB(A)	Lwa, dB(A)						
		125 Hz	250 Hz	500 Hz	1 kHz	2 kHz	4 kHz	8 kHz
Inlet	75	66	69	73	62	60	56	52
Outlet	77	68	71	75	64	62	58	54
Surrounding	59	53	55	54	47	44	40	37

Measured at 1037 m³/h, 101 Pa

180-4L3	LWA total, dB(A)	Lwa, dB(A)						
		125 Hz	250 Hz	500 Hz	1 kHz	2 kHz	4 kHz	8 kHz
Inlet	76	65	67	75	63	58	57	51
Outlet	78	68	70	76	65	61	58	53
Surrounding	60	51	54	57	48	42	40	36

Measured at 1052 m³/h, 106 Pa

The fan characteristic curves were determined in accordance with EN ISO 5801. The sound levels were determined in accordance with DIN 45635 resp. ISO 3744 at a distance of 1 m from the fan.

The company reserves the right to make changes of technical data without prior notice

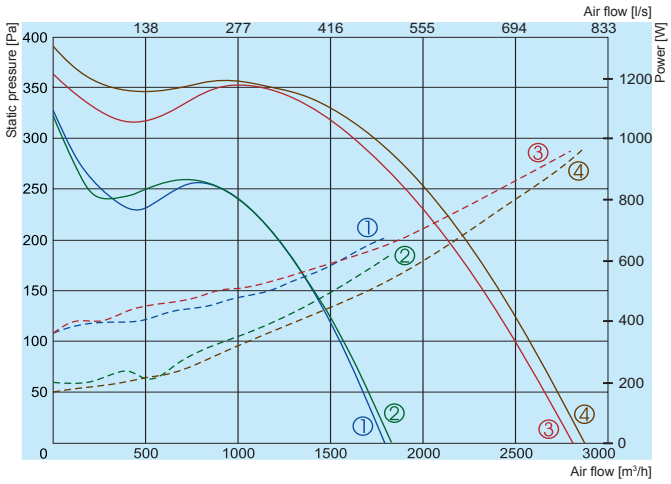

① KF T120 200-4L1

② KF T120 200-4L3

③ KF T120 225-4L1

④ KF T120 225-4L3

——— Performance

- - - - - - Power consumption

		200-4L1	200-4L3	225-4L1	225-4L3
Voltage/Frequency	[V/Hz]	~1,230/50	~3,400/50	~1,230/50	~3,400/50
Power consumption	[kW]	0,57	0,54	0,97	0,92
Current	[A]	3,08	1,44	4,85	1,72
Speed	[min⁻¹]	1360	1390	1350	1430
Max. airflow	[m³/h]	1794	1826	2800	2860
Min/Max ambient air temperature	[°C]	-40/+40	-40/+40	-40/+40	-40/+40
Weight	[kg]	29	29	34	34
Wiring diagram		No. 1	No. 3	No. 1	No. 3
Protection class:	motor	IP-55	IP-55	IP-55	IP-55
Comply with ERP 2013		+	+	+	+

200-4L1	LWA total, dB(A)	Lwa, dB(A)						
		125 Hz	250 Hz	500 Hz	1 kHz	2 kHz	4 kHz	8 kHz
Inlet	79	68	70	78	63	64	60	54
Outlet	81	73	74	79	67	63	60	59
Surrounding	63	55	57	61	49	46	43	40

Measured at 1541 m³/h, 100 Pa

200-4L3	LWA total, dB(A)	Lwa, dB(A)						
		125 Hz	250 Hz	500 Hz	1 kHz	2 kHz	4 kHz	8 kHz
Inlet	79	69	72	77	65	63	58	55
Outlet	82	73	75	80	66	64	60	58
Surrounding	64	56	58	62	49	47	42	40

Measured at 1570 m³/h, 101 Pa

225-4L1	LWA total, dB(A)	Lwa, dB(A)						
		125 Hz	250 Hz	500 Hz	1 kHz	2 kHz	4 kHz	8 kHz
Inlet	82	70	76	80	70	67	63	58
Outlet	84	74	77	82	71	68	64	60
Surrounding	68	57	62	65	54	50	46	43

Measured at 2492 m³/h, 100 Pa

225-4L3	LWA total, dB(A)	Lwa, dB(A)						
		125 Hz	250 Hz	500 Hz	1 kHz	2 kHz	4 kHz	8 kHz
Inlet	83	72	74	81	70	68	63	60
Outlet	85	75	79	82	71	69	65	61
Surrounding	69	59	63	66	54	51	47	44

Measured at 2585 m³/h, 102 Pa

The fan characteristic curves were determined in accordance with EN ISO 5801. The sound levels were determined in accordance with DIN 45635 resp. ISO 3744 at a distance of 1 m from the fan.

KF T120

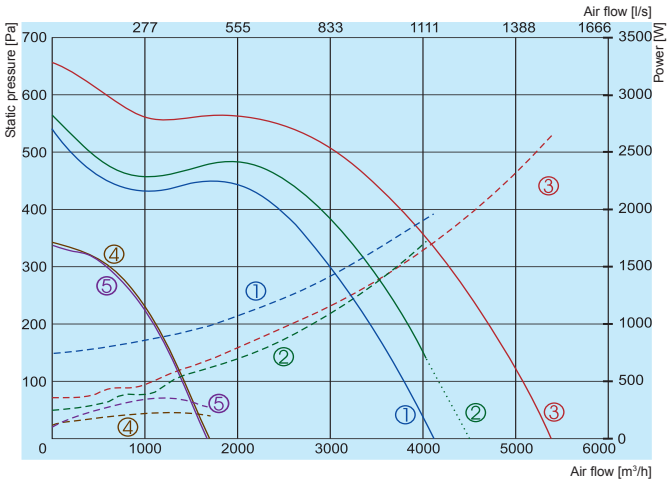

① KF T120 250-4L1
② KF T120 250-4L3
③ KF T120 280-4L3
④ KF T120 315-4L1
⑤ KF T120 315-4L3

Performance
Power consumption
Not operating zone

		250-4L1	250-4L3	280-4L3	315-4L1	315-4L3
Voltage/Frequency	[V/Hz]	~1,230/50	~3,400/50	~3,400/50	~1,230/50	~3,400/50
Power consumption	[kW]	1,94	1,6	2,66	0,32	0,18
Current	[A]	9,3	3,37	4,7	1,77	0,68
Speed	[min^{-1}]	1420	1430	1440	1350	1330
Max. airflow	[m³/h]	4106	3860	5236	1693	1676
Min/Max ambient air temperature	[°C]	-40/+40	-40/+40	-40/+40	-40/+40	-40/+40
Weight	[kg]	44	55	45	45	45
Wiring diagram		No.2	No.3	No.3	No.1	No.3
Protection class:	motor	IP-55	IP-55	IP-55	IP-55	IP-55
Comply with ERP 2013		+	+	+	+	+

250-4L1	Lwa total, dB(A)	Lwa, dB(A)						
		125 Hz	250 Hz	500 Hz	1 kHz	2 kHz	4 kHz	8 kHz
Inlet	85	75	79	82	73	71	66	61
Outlet	87	77	81	84	75	72	68	65
Surrounding	71	61	66	67	58	54	50	47

Measured at 3824 m³/h, 100 Pa

250-4L3	Lwa total, dB(A)	Lwa, dB(A)						
		125 Hz	250 Hz	500 Hz	1 kHz	2 kHz	4 kHz	8 kHz
Inlet	86	78	80	83	73	70	67	63
Outlet	88	80	81	86	75	74	66	65
Surrounding	72	64	66	68	59	56	49	48

Measured at 3860 m³/h, 190 Pa

280-4L3	Lwa total, dB(A)	Lwa, dB(A)						
		125 Hz	250 Hz	500 Hz	1 kHz	2 kHz	4 kHz	8 kHz
Inlet	90	82	83	88	75	71	68	67
Outlet	92	85	83	89	78	76	68	69
Surrounding	74	67	68	71	60	56	51	50

Measured at 5077 m³/h, 100 Pa

315-4L1	Lwa total, dB(A)	Lwa, dB(A)						
		125 Hz	250 Hz	500 Hz	1 kHz	2 kHz	4 kHz	8 kHz
Inlet	78	68	73	74	66	63	57	54
Outlet	80	69	75	77	68	65	59	56
Surrounding	63	53	60	59	51	47	41	39

Measured at 1407 m³/h, 101 Pa

315-4L3	Lwa total, dB(A)	Lwa, dB(A)						
		125 Hz	250 Hz	500 Hz	1 kHz	2 kHz	4 kHz	8 kHz
Inlet	78	67	73	74	66	64	56	54
Outlet	80	69	74	77	67	65	59	55
Surrounding	63	53	59	59	50	47	40	38

Measured at 1401 m³/h, 100 Pa

The fan characteristic curves were determined in accordance with EN ISO 5801. The sound levels were determined in accordance with DIN 45635 resp. ISO 3744 at a distance of 1 m from the fan.

The company reserves the right to make changes of technical data without prior notice

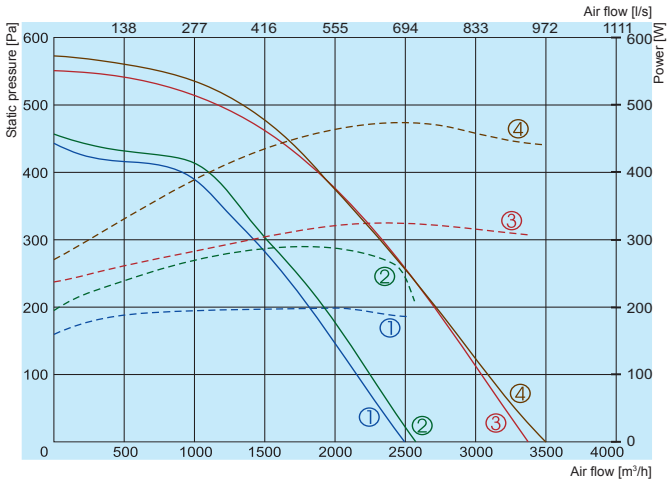

① KF T120 355-4L1

② KF T120 355-4L3

③ KF T120 400-4L1

④ KF T120 400-4L3

——— Performance

------- Power consumption

		355-4L1	355-4L3	400-4L1	400-4L3
Voltage/Frequency	[V/Hz]	~1,230/50	~3,400/50	~1,230/50	~3,400/50
Power consumption	[kW]	0,4	0,29	0,54	0,47
Current	[A]	2,5	0,98	3,05	1,45
Speed	[min⁻¹]	1320	1340	1360	1390
Max. airflow	[m³/h]	2499	2561	3374	3487
Min/Max ambient air temperature	[°C]	-40/+40	-40/+40	-40/+40	-40/+40
Weight	[kg]	53	53	56	56
Wiring diagram		No.1	No.3	No.1	No.3
Protection class:	motor	IP-55	IP-55	IP-55	IP-55
Comply with ERP 2013		+	+	+	+

355-4L1	LWA total, dB(A)	Lwa, dB(A)						
		125 Hz	250 Hz	500 Hz	1 kHz	2 kHz	4 kHz	8 kHz
Inlet	84	74	77	82	70	69	63	58
Outlet	85	76	79	83	72	71	65	60
Surrounding	67	60	61	63	55	53	47	43

Measured at 2111 m³/h, 120 Pa

355-4L3	LWA total, dB(A)	Lwa, dB(A)						
		125 Hz	250 Hz	500 Hz	1 kHz	2 kHz	4 kHz	8 kHz
Inlet	84	75	78	82	71	70	63	58
Outlet	86	77	79	83	73	72	65	61
Surrounding	67	61	62	63	56	54	47	43

Measured at 2219 m³/h, 104 Pa

400-4L1	LWA total, dB(A)	Lwa, dB(A)						
		125 Hz	250 Hz	500 Hz	1 kHz	2 kHz	4 kHz	8 kHz
Inlet	86	77	75	82	79	74	68	67
Outlet	88	78	81	85	77	74	70	69
Surrounding	71	62	64	67	62	57	52	50

Measured at 2915 m³/h, 141 Pa

400-4L3	LWA total, dB(A)	Lwa, dB(A)						
		125 Hz	250 Hz	500 Hz	1 kHz	2 kHz	4 kHz	8 kHz
Inlet	86	77	76	82	80	74	69	68
Outlet	88	79	81	85	78	75	71	70
Surrounding	71	63	65	67	63	58	53	52

Measured at 2956 m³/h, 134 Pa

The fan characteristic curves were determined in accordance with EN ISO 5801. The sound levels were determined in accordance with DIN 45635 resp. ISO 3744 at a distance of 1 m from the fan.

KF T120

Wiring diagram No. 1

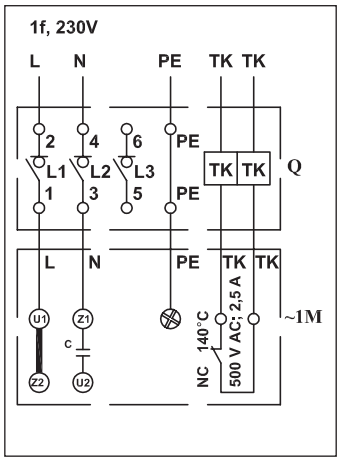

Wiring diagram No. 2

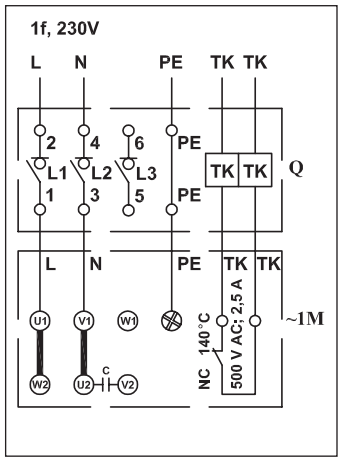

Wiring diagram No. 3

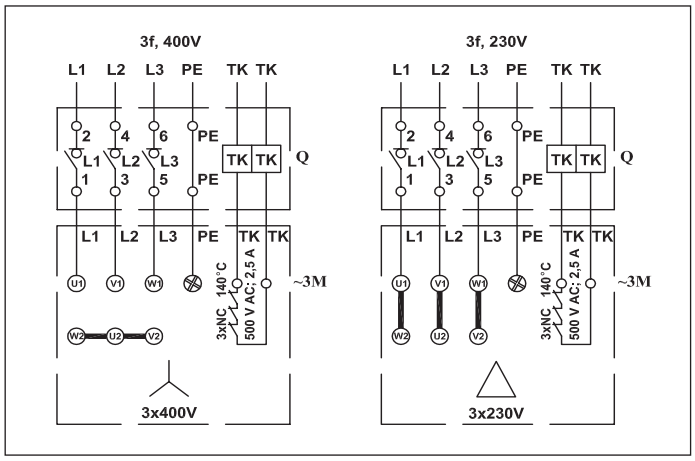

Q - switch
M - fan motor

The company reserves the right to make changes of technical data without prior notice